V2104.01

Let's grow together

ESL122

Electric Stacker 1.2T

- Strong chassis
- Rigid mast
- Easy operation
- Efficient hydraulic system

LI-ION TECHNOLOGY

EP EQUIPMENT CO.,LTD
www.ep-ep.com

CE

FEATURES

Strong chassis

The side impact beam, plates, and boxes make the chassis stronger and can greatly reduce stress and deformation caused by heavy load.

Rigid mast

The rigidity of the mast is greatly improved by its beam structure to provide smooth lifting and stacking for daily operation.

Easy operation

The extra-long and offset tiller with the crawl speed button provides ESL122 a better visibility and nimble maneuverability when operating in tight space.

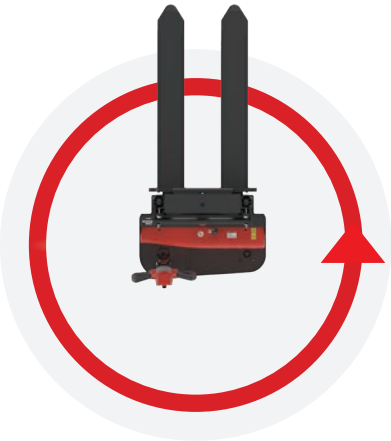

Efficient hydraulic system

High quality hydraulic pump ensures very little noise, maximum efficiency, durability and shortens lifting time.

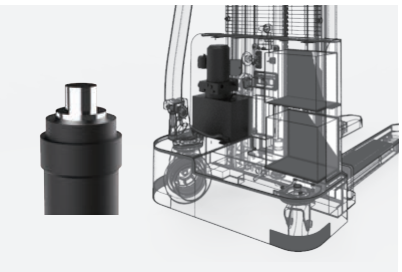

Electric Stacker 1.2T

ESL122

Distinguishing mark				
1.1	Manufacturer			EP
1.2	Model designation			ESL122
1.3	Drive unit			electrics
1.4	Operator type			pedestrian
1.5	rated capacity	Q	t	1.2
1.6	Load center distance	c	mm	600
1.8	Load distance, centre of drive axle to fork	x	mm	798
1.9	Wheelbase	y	mm	1212
Weight				
2.1	Service weight (include battery)		kg	570
2.2	Axle loading, laden driving side/loading side		kg	650/1120
2.3	Axle loading, unladen driving side/loading side		kg	430/140
Types,Chassis				
3.1	Tyre type Driving wheels/Loading wheels			PU/PU
3.2	Tyre size, driving wheels (diameter×width)		mm	Ø210×70
3.3	Tyre size, loading wheels (diameter×width)		mm	Ø74×72
3.4	Tyre size, caster wheels (diameter×width)		mm	Ø130×55
3.5	Wheels, number driving, caster/loading (x=drive wheels)		mm	1x +1/4
3.6	Track width, front,driving side	b10	mm	531
3.7	Track width,rear,loading side	b11	mm	405
Dimensions				
4.2	Height, mast lowered	h1	mm	1956
4.4	Lift height	h3	mm	2630
4.5	Height, mast extended	h4	mm	3271
4.9	Height drawbar in driving position min./max.	h14	mm	750/ 1340
4.15	Lowered height	h13	mm	85
4.19	Overall length	l1	mm	1713
4.20	Length to face of forks	l2	mm	563
4.21	Overall width	b1	mm	792
4.22	Fork dimensions	s/ e/ l	mm	60/ 170/ 1150
4.24	Fork carriage width	b3	mm	680/770
4.25	Distance between fork-arms	b5	mm	570/685
4.32	Ground clearance, center of wheelbase	m2	mm	25
4.34.1	Aisle width for pallets 1000 × 1200 crossways	Ast	mm	2224
4.34.2	Aisle width for pallets 800 × 1200 lengthways	Ast	mm	2158
4.35	Turning radius	Wa	mm	1390
Performance data				
5.1	Travel speed, laden/ unladen		km/ h	4.2/4.5
5.2	Lifting speed, laden/ unladen		m/ s	0.10/0.14
5.3	Lowering speed, laden/ unladen		m/ s	0.10/0.10
5.8	Max. gradeability, laden/unladen		%	4/10
5.10	Service brake type			Electromagnetic
Electric-engine				
6.1	Drive motor rating S2 60 min		kW	0.75
6.2	Lift motor rating at S3 15%		kW	2.2
6.3	The maximum allowed size battery		mm	275x190x365
6.4	Battery voltage/nominal capacity K20		V/ Ah	1x24/80
6.5	Battery weight		kg	27.5
Addition data				
8.1	Type of drive unit			DC
10.5	Steering type			Mechanical
10.7	Sound pressure level at the driver's ear		dB (A)	74

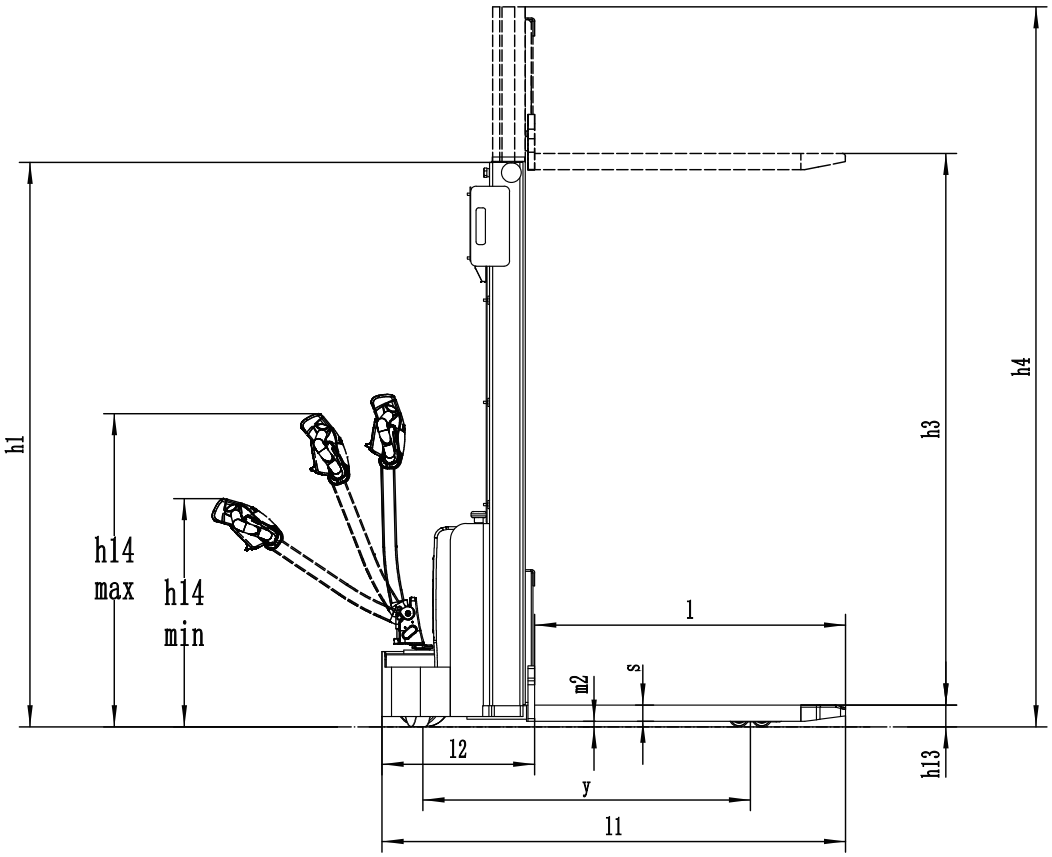

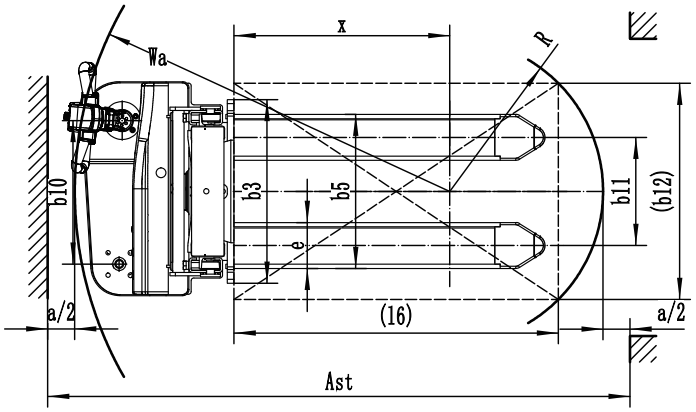

RATDE CAPACITIES GRAPH

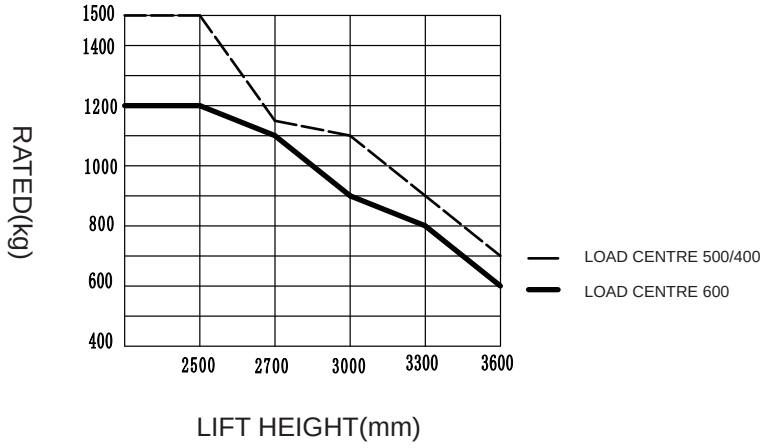

Mast Option:

Mast types	Height ,mast lowered (h1)	Free lift (h2+h13)	Lift height (h3+h13)	Height ,mast extended (h4)
Duplex ZT	1856	——	2515	3071
	1956	——	2715	3271
	2106	——	3015	3571
	2256	——	3315	3871
	2406	——	3615	4171

Option:

Optional items	ESL122
Fork width	○570mm/685mm
Battery capacity	80Ah ●China
Special backrest	—
Battery indicator with hour meter	●
Traction Motor	0.75Kw，DC ●China
Pump Motor	2.2Kw，DC ●China
Driving wheel	○PU wheel with Pattern
half speed function in turning	—
Mast screen	●iron mesh
Accelerator	DTJ07409B-H ●China
Note: ● standard ○ option — NA	