Technical sheet :

MRT 1440 EASY T4 S1 400°

MANITOU
HANDLING YOUR WORLD

Capacities		Metric	Imperial
Max. capacity	Q	4000 kg	8818 lbs
Max. lifting height	h3	13.8 m	45 ft 3 in
Max. Reach	l4	11.5 m	37 ft 9 in
Weight and dimensions			
Overall width	b1	2.4 m	7 ft 10 in
Overall height	h17	2.97 m	9 ft 9 in
Overall cab width	b4	0.95 m	3 ft 1 in
Outer frame turning radius	Wa3	3.9 m	12 ft 10 in
Ground clearance	m4	0.34 m	1 ft 1 in
Wheelbase	y	2.32 m	7 ft 7 in
Tilt-up angle	a4	12 °	12 °
Tilt-down angle	a5	105 °	105 °
Overall weight		12825 kg	28274 lbs
Forks length / width / section	l / e / s	1200 mm x125 mm x 50 mm	47.244 in x4.921 in x 1.969 in
Wheels			
Standard tyres		405/70-20	405/70-20
Drive wheels (front / rear)		2 / 2	2 / 2
Steering mode		2 wheel steer, 4 wheel steer, Crab mode	2 wheel steer, 4 wheel steer, Crab mode
Stabilisers			
Stabs Type		Wing Type	Wing Type
Controls with stabs		Stabs Commands Individual or Simultaneous	Stabs Commands Individual or Simultaneous
Engine			
Engine brand		Perkins	Perkins
Engine norm		Stage IV / Tier 4 Final	Stage IV / Tier 4 Final
Engine model		854 E-E 34 TA	854 E-E 34 TA
I.C. Engine power rating / Power (kW)		102 Hp / 75 kW	102 Hp / 75 kW
Max. torque / Engine rotation		430 Nm @ 1200 rpm	430 Nm @ 1200 rpm
Number of cylinders - Capacity of cylinders		4 - 3400 cm³	4 - 207.48 in³
Injection		engine Injection direct	engine Injection direct
Engine cooling system		Water	Water
Number of batteries / Battery / Batteries capacity		1 x 12 V / 120 Ah	1 x 12 V / 120 Ah
Transmission			
Transmission type		Hydrostatic	Hydrostatic
Number of gears (forward / reverse)		2 2	2 2
Max. travel speed		32 km/h	19.9 mph
Drawbar pull (Laden)		8600 daN	8600 daN
Parking brake		Automatic negative parking brake	Automatic negative parking brake
Service brake		Hydraulic	Hydraulic
Hydraulics			
Hydraulic pump type		Gear pump	Gear pump
Hydraulic flow		115 l/min	115 l/min
Hydraulic Pressure		270 Bar	19 PSI
Tank capacities			
Hydraulic oil		150 l	39.63 US gal
Fuel tank		130 l	34.35 US gal
Diesel Exhaust fluid (AdBlue® type)		19 l	5.02 US gal
Noise and vibration			
Noise at driving position (LpA)		79.7 dB(A)	79.7 dB(A)
Environmental noise (LwA)		0 dB(A)	0 dB(A)
Vibration to whole hand/arm		< 2.50 m/s²	< 2.50 m/s²
Miscellaneous			
Steering wheels (front / rear)		2 / 2	2 / 2
Controls		2 Joysticks	2 Joysticks
Safety cab homologation		ROPS - FOPS cab (level 2)	ROPS - FOPS cab (level 2)
Attachment recognition system (E-Reco)		Standard	Standard
Load centre of gravity	c	500 mm	19.685 in
Load moment indicator		Standard	Standard

Dimensional drawing

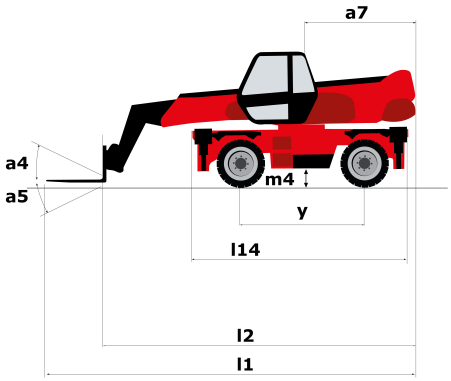

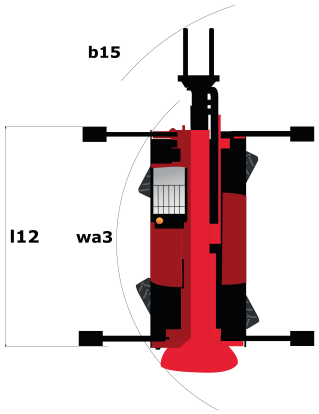

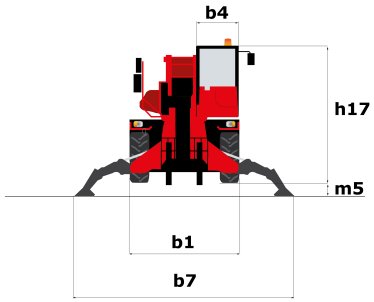

Other data		Metric	Imperial
Overall length (with forks)	l1	6.55 m	21 ft 6 in
Length to face of forks	l2	5.35 m	17 ft 7 in
Length of frame	l14	4.35 m	14 ft 3 in
Wheelbase	y	2.32 m	7 ft 7 in
Ground clearance	m4	0.34 m	1 ft 1 in
Counterweight offset (turret at 90°)	a7	2.04 m	6 ft 8 in
Tilt-up angle	a4	12 °	12 °
Tilt-down angle	a5	105 °	105 °
Overall length at stabilisers	l12	4.3 m	14 ft 1 in
Outer frame turning radius	Wa3	3.9 m	12 ft 10 in
Outer turning radius (with forks)	b15	5.25 m	17 ft 3 in
Overall width	b1	2.4 m	7 ft 10 in
Overall width with stabilisers extended	b7	3.98 m	13 ft 1 in
Overall cab width	b4	0.95 m	3 ft 1 in
Overall height	h17	2.97 m	9 ft 9 in
Ground clearance under front tires on stabilizers	m5	0.16 m	6 in

Load chart

Machine on lowered stabilisers with forks Metric

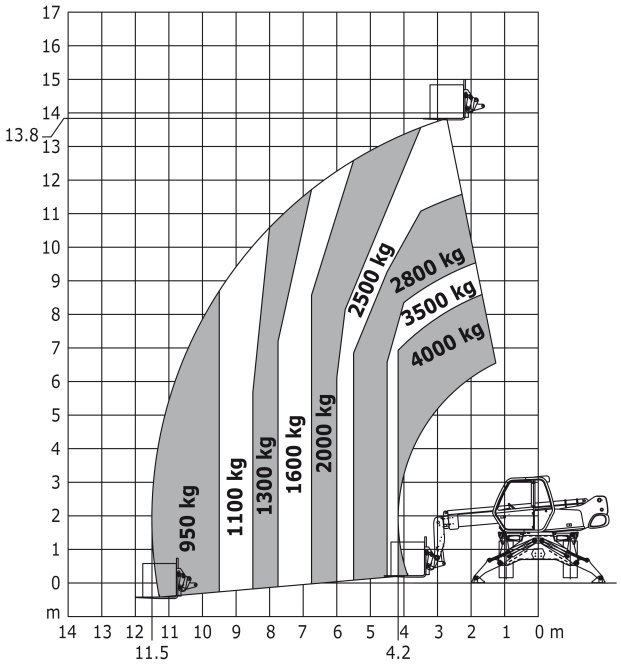

Machine on lowered stabilisers with forks Imperial

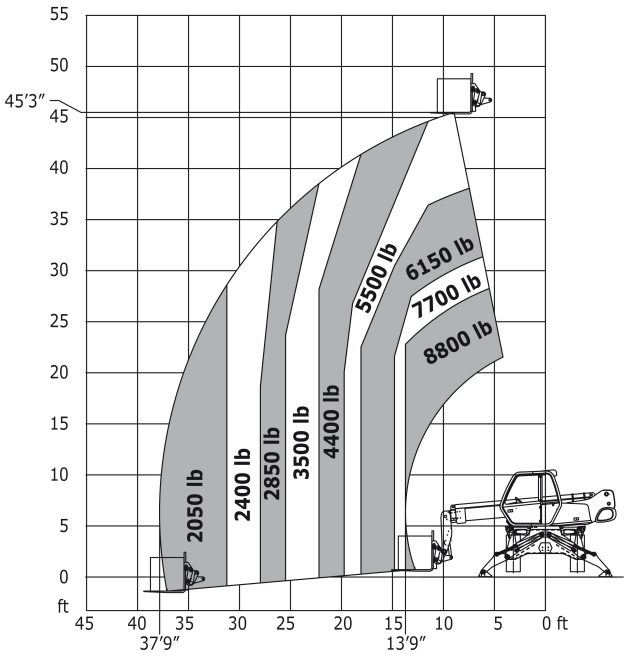

Machine on lowered stabilisers with 1500 kg jib Metric

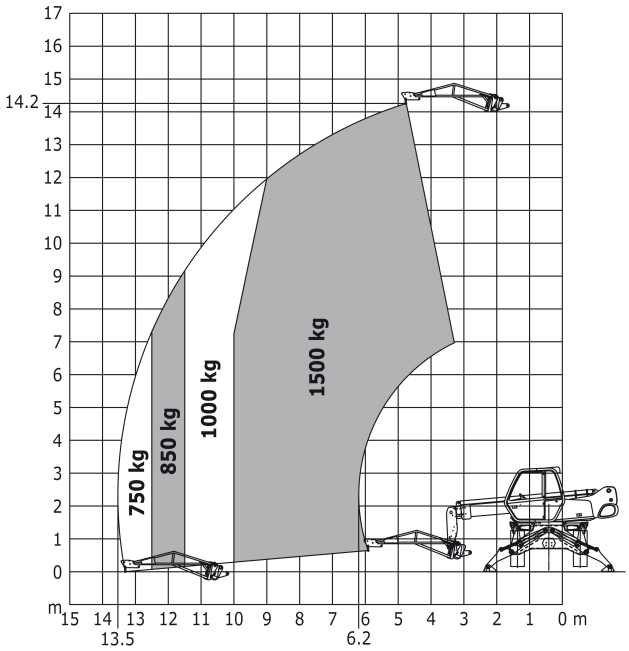

Machine on lowered stabilisers with 1500 kg jib Imperial

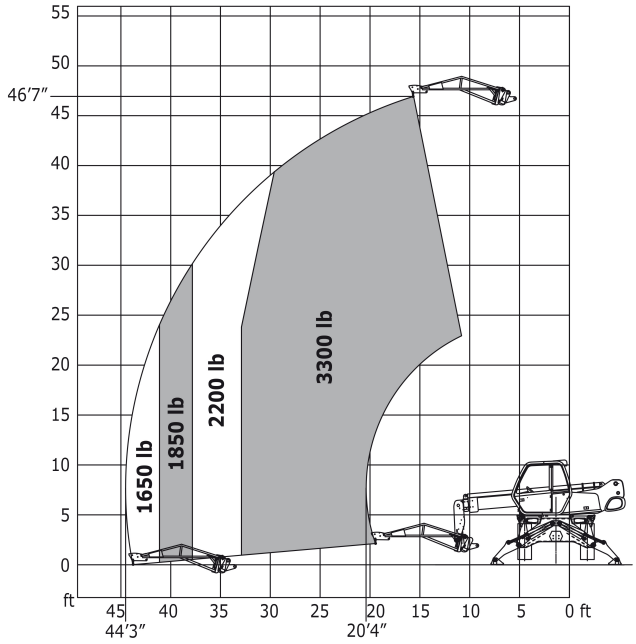

Machine on lowered stabilisers with 365/1000 kg platform Metric

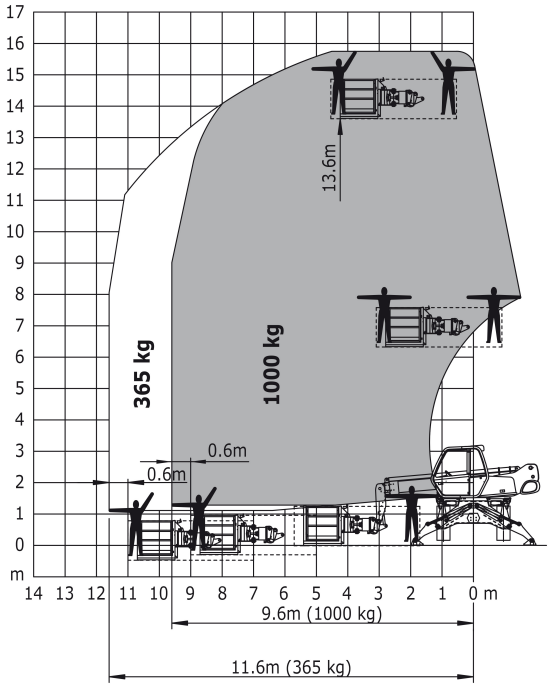

Machine on lowered stabilisers with 365/1000 kg platform Imperial

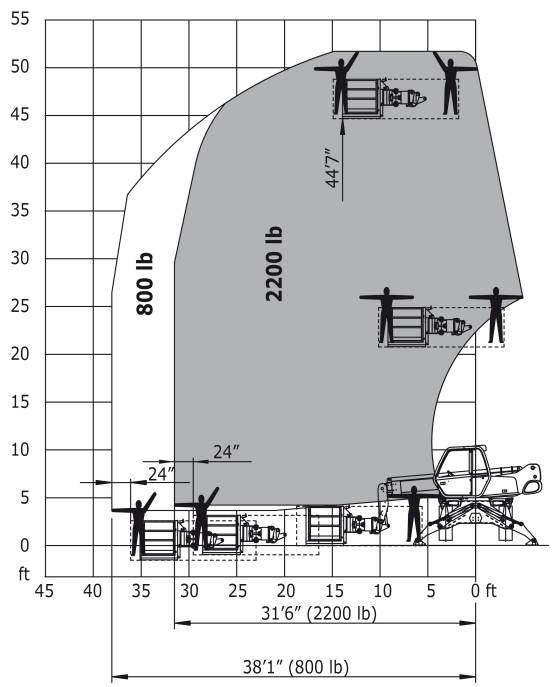

Machine on lowered stabilisers with 3D positive / negative Metric

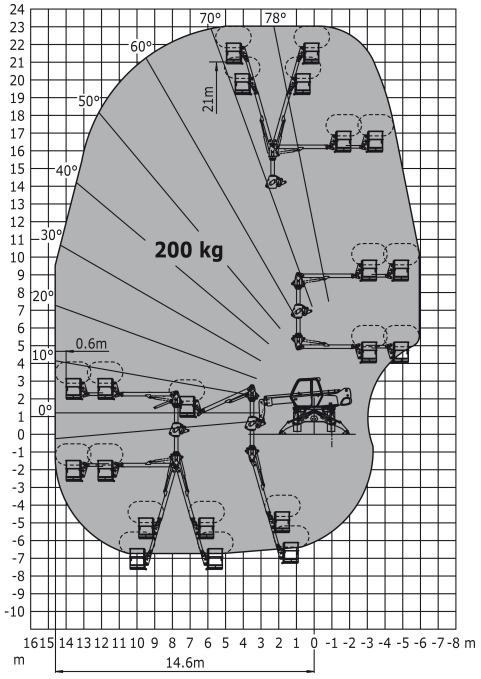

Machine on lowered stabilisers with 3D positive / negative Imperial

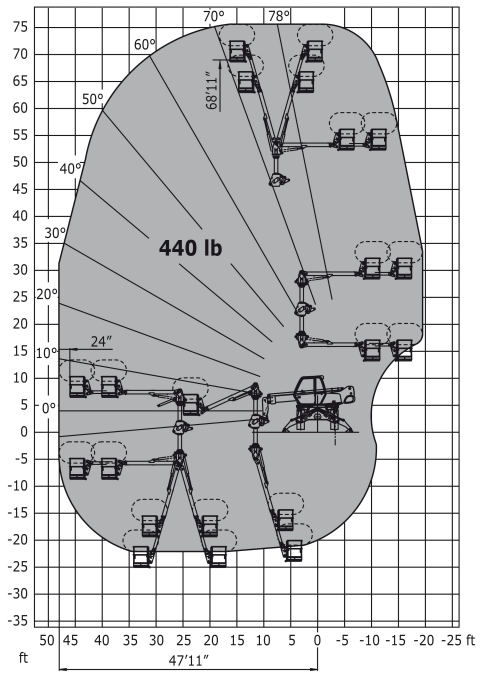

Machine on tyres with forks Metric

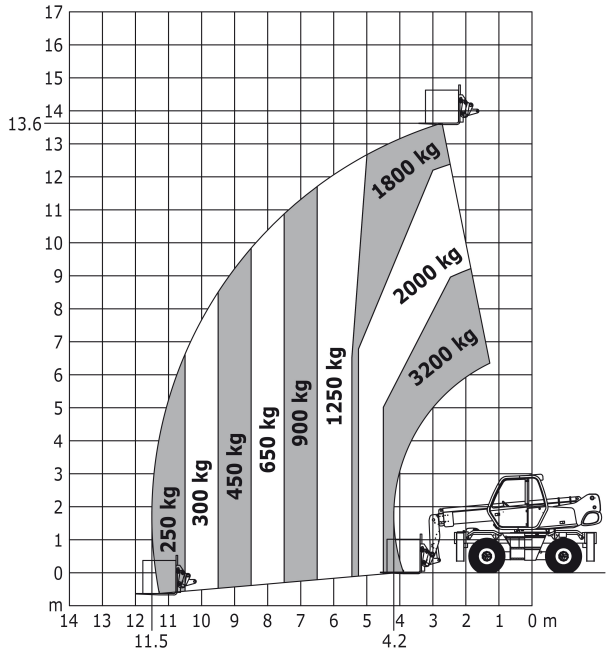

Machine on tyres with forks Imperial

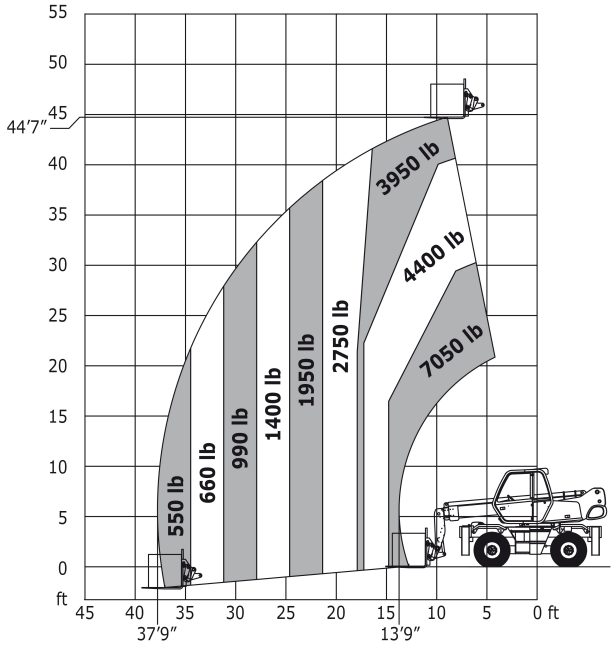

Siège Social
430 rue de l'Aubinière - 44150 Ancenis Cedex - France
Tel: +33(0)2 40 09 10 11 - Fax: +33 (0)2 40 09 10 97
www.manitou.com

This brochure describes versions and configuration options for Manitou products which may be fitted with different equipment. The equipment described in this brochure may be standard, optional or not available depending on version. Manitou reserves the right to change the specifications shown and described at any time and without prior warning. The manufacturer is not liable for the specifications given. For more information, contact your Manitou dealer. Non-contractual document. Product descriptions may differ from actual products. List of specifications is not comprehensive. The logos and visual identity of the company are the property of Manitou and may not be used without authorisation. All rights reserved. The photos and diagrams contained in thisbrochure are provided for information only.
MANITOU BF SA - Limited company with board of directors - Share capital: 39,668,399 euros - 857 802 508 RCS Nantes